There is considerable (and mostly misinformed) debate on the web about angle change on guided sharpening devices along the length of the blade. Contrary to most peoples' intuition, the angle does not change throughout the straight length of the blade, no matter how long the blade is. It will change through the arc of the belly of the knife where the edge dips to the spine. The geometry at work is planar in nature and because the stones are able to rotate on the guide rod, they are able to maintain the same plane of contact with the blade when the blade is straight. When the blade begins to curve, the stone enters a new plane at a different angle. This new angle can be more acute or more obtuse depending on its distance from the pivot point of the guide rod. You can adjust for this effect by mounting the blade with the tip at varying distances from the clamp. Using a Sharpie marker to color in the bevel will help you quickly establish the optimum front to back positioning for your knife by allowing you to visualize the way the stone tracks along the curve. You can use the record keeper supplied with the kit to jot down the settings for each of your knives and repeat those settings for future sharpening sessions. When you've adjusted so that the angle is perfectly consistent throughout curvature of the blade, you may have a slightly wider bevel at the tip because the edge is being cut from the thicker stock of the blade near the spine, unless the knife has a distal taper.

Here the stone is against the ruler directly above the pivot point. The angle shown on the cube is 17.4 degrees. There is a second square behind the cube ensuring that the cube is plumb.

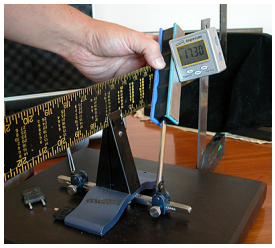

Here the stone is held at 5.5 out from the the pivot point, simulating an 11" blade. The Angle Cube reads 17.3 degrees. The square is again behind the cube keeping it plumb. The margin of error on the experiment was ±.1 degree.

The image below shows the adjustment of the knife to find the "sweet spot".

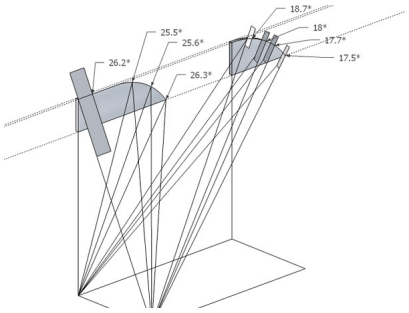

I recently wrote a brief article on Blade Forums about finding the ideal location of the knife in the clamp:

This issue comes up a lot and gives people fits but it's very easy to solve. On a practical level, there are a couple of reasons why you might get a larger or smaller bevel along the curve of the blade.

1. *As the stone rotates on the guide rod along the curve, it is constantly entering a new plane of contact. Depending on the curvature of the blade and the distance of the tip of the knife from the clamp, the change in bevel angle may cause the bevel to become wider or smaller. The effect is proportionate to the radius of the belly of the blade. The easiest way to find the 'sweet spot' for a given knife is to mount the knife with the blade approximately centered in the clamp and then color in the entire bevel with a Sharpie marker. After setting the angle, lightly swipe one of the fine stones down the length of the blade to see where the marker is removed. If the stone is removing the marker from the edge along the straight portion but then dipping down into the shoulder toward the tip, you know you need to reposition the knife with the tip closer to the clamp. If the opposite happens - that the stone removes the marker at the shoulder of the bevel along the straight portion and then moves to the edge along the curve, then you need to reposition the knife with the tip further from the clamp. Once you find the sweet spot, measure your knife's position using the alignment guide and record the settings on the chart for future touch-ups.*

2. *The second reason you might experience a wider bevel toward the tip of the knife is due to the way the knife is ground. As the belly of the blade curves toward the spine of the knife, the edge is often cut from thicker stock resulting in a wider bevel. An 1/8" thick blade with a 22° per side angle will have much smaller bevels than a 1/4" blade with the same 22° angles. On knives where the tip is inline with the spine and where there is not a distal taper, the effect is more pronounced. A wider bevel in this circumstance is a purely cosmetic concern since the angle is constant.*

There is a fair argument to be made for intentionally selecting either a more acute or more obtuse angle at the tip depending on the use of the knife. Ken Schwartz and I agree that for a chef's knife, it's a benefit to have a more acute belly and tip for slicing and a slightly wider angle along the straight and at the heel for chopping. I prefer the reverse for boning and fillet knives since the tip is constantly in banging around on the bones. A knife designed for utility cutting or for thrusting would benefit from a more obtuse angle at the tip and a more acute angle along the straight portion of the blade.